GigaTera® by PLANLED™
beyond the light

MAHA 400W

LED Area Flood Lighting

Description

Unrivaled Efficacy 130 lm/W
Excellent Cooling Structure
Wireless Lighting Control / Built-in 20KV Surge Protection Device

Specifications

Model Name		MA400	
Power Consumption		400W	
Correlated Color Temperature		5000K (3000K / 4000K available)	
Luminous Flux *		52,000 lm	
Luminous Efficacy *		130 lm/W	
LED Driving Current *		71.4 mA	
Color Rendering Index		80 Ra	
Light Distribution		Asymmetric Wide	
BUG Rating		B3 – U2 – G4 (Backlight – Uplight – Glare)	
LED Chip Manufacturer		SAMSUNG	
Input Voltage		100 - 277 Vac	347 - 480 Vac
Input Current		Max 5.0A (@100Vac)	Max 1.5A (@347Vac)
Power Factor		≥0.9 at Max load	
Frequency		50 ~ 60 Hz	
Surge Protection		Line-Line 20KV, Line-FG 20KV	
Driver Type		Constant Current (CC)	
Driver Manufacturer		KMW INC. / Made in Korea	
Size (W x L x H)		22.7 x 22.7 x 8.5 (inch)	577 x 576.5 x 215.5 (mm)
Weight (Driver included)		44 lb	20 Kg
Material	**Body**	Cast Aluminum	
	Optic	Silver Coating Reflector	
	Cover	Tempered Glass 4.0T (Clear)	
Finish		Powder Coating	
IP Rating		IP66	
Mounting Option		Swivel Bracket / Pole Mount	
Operating Temperature		-22°F ~ 127°F	-30°C ~ 53°C
Life Time		50,000 Hours (@77°F / 25°C)	
Warranty		5 Years (12 hours usage per day)	

Option

Control System	Wireless (ZigBee)

***Tolerance : ± 5%**

Applications

Sporting Facility
Airplane Hangar
Airport Apron
Parking Lot
Harbour
Yard

Certification

UL
FCC
DLC
PSE
CE
ENEC
KC

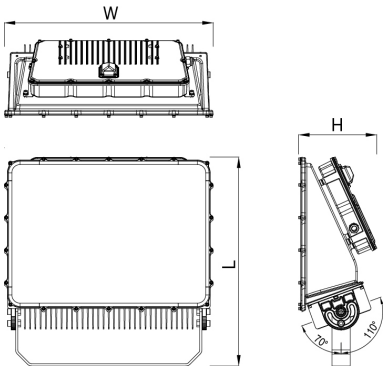

Photometry

See photometric .ies files for details.

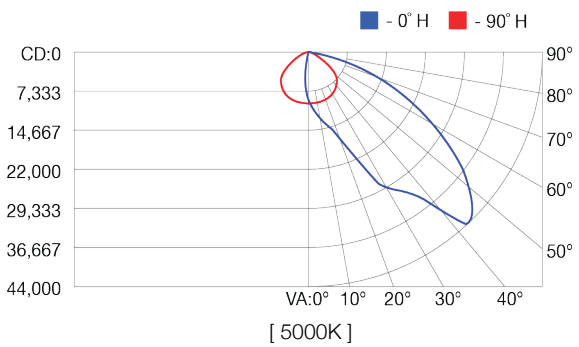

[5000K]

Control System (Optional)

ZigBee (Mesh Networking)	Wireless Control
Input Voltage	15 Vdc
Max. Power Consumption	0.3 W (@15Vdc)
Standard	2.4 GHz - IEEE 802.15.4 (Compatible)
Network	Mesh
RF Tx Power	Max. +8 dBm (Typ. 5 dBm)
Data Rate	250 kbps
Security	128 bit AES Encryption Algorithms
Dimmer	PWM, 0 – 10 Vdc
Antenna	Omni Type, 2 dBi

Mounting Type (Optional)

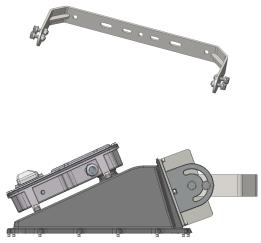	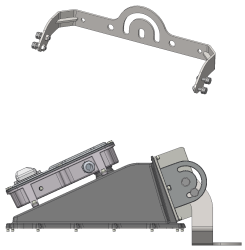	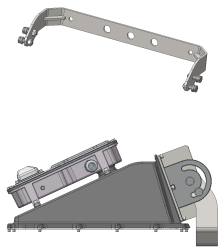	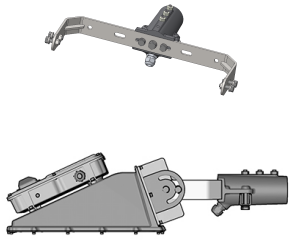
BK010010 Up : 110° / Down 70°	BK010200 Up : 150° / Down 10°	BK010230 Up : 150° / Down 10°	BK010020 Up : 110° / Down 70°

Ordering Information

MAHA : LED Area Flood Lighting (Order Code Usage : MA400-A50NG1010)

	OOO	-	O	OO	O	OO	OOO
	Power Consumption		Input Voltage	CCT(K)	Dimming Control	Fixture Color	Bracket
MA	**200**=200W **300**=300W **400**=400W		**A**=100~277V **B**=100~240V **C**=347~480V	**30**=3000 **40**=4000 **50**=5000	**N**=None **Z**=ZigBee	**G1**=Gray Powder	**090**=BK010090 (*MA200 only) **100**=BK010100 (*MA200 only) **210**=BK010210 (*MA200 only) **220**=BK010220 (*MA200 only) **110**=BK010110 (*MA200/300 only) **120**=BK010120 (*MA200/300 only) **130**=BK010130 (*MA200/300 only) **140**=BK010140 (*MA200/300 only) **190**=BK010190 (*MA300 only) **240**=BK010240 (*MA300 only) **250**=BK010250 (*MA300 only) **010**=BK010010 (*MA400 only) **020**=BK010020 (*MA400 only) **200**=BK010200 (*MA400 only) **230**=BK010230 (*MA400 only)

PLANLED INC
1800 S 341st PL. Federal Way WA 98003
Tel : 866-552-5529 / E-Mail : info@planled.com / www.planled.com

The information in this document is subject to change without notice. / Document Revision V 0.85 2015.01.30